Part Number: TM12M80Z

Description: (3.1") 80mm x 14mm x ¾" *3 wing No Shear*

Standard Replacement Knives:
RG01MAA3
RG01MAG3
(Note: Replacement Inserts Sold in Box of 10
above price is per insert)

Replacement Screws:
VT05MAA9 (M5 x 8)

Replacement Torx Wrench:
CB03MDA9 (Torx 15)

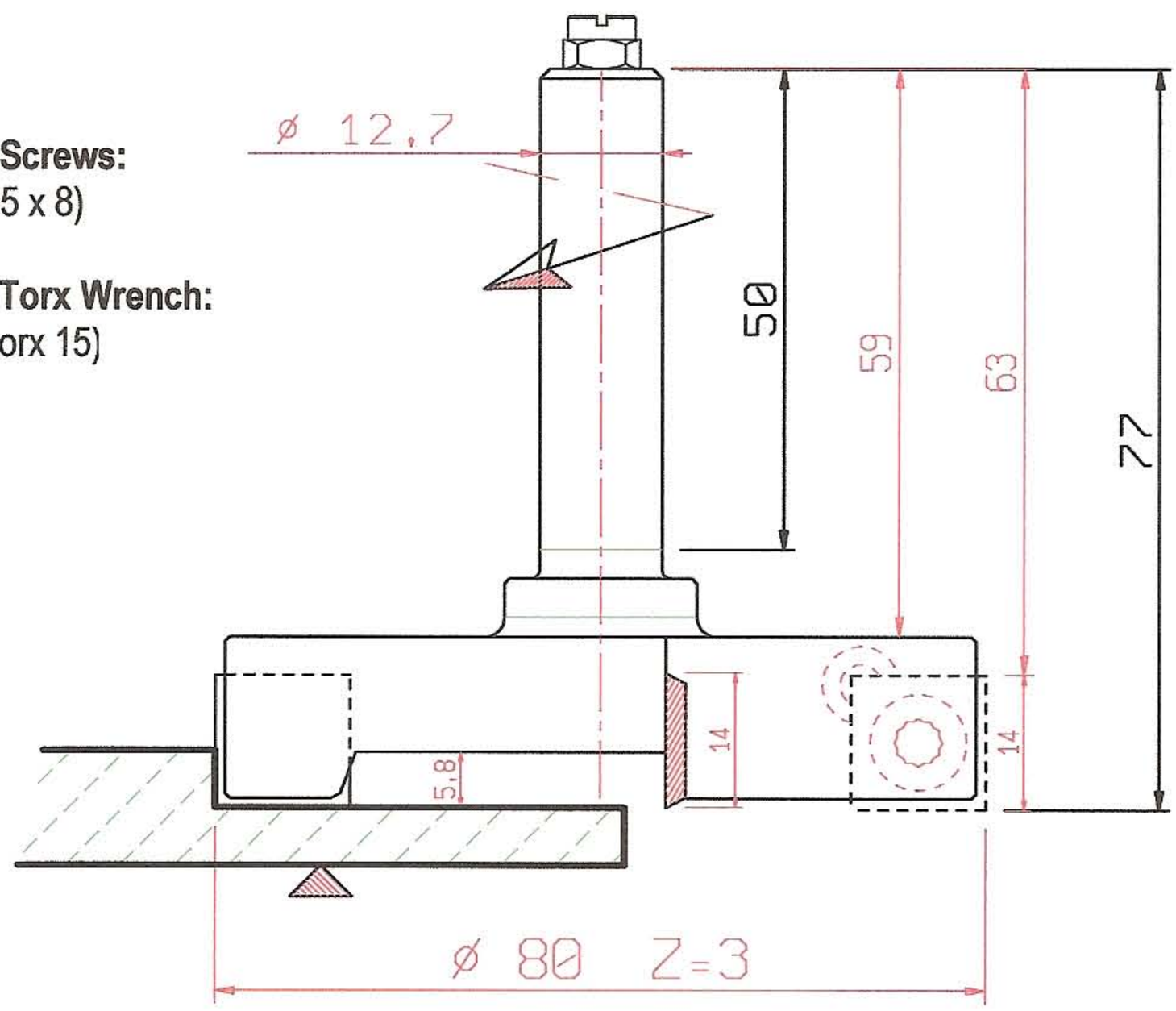

CODICE ARTICOLO
TM12M80Z

punta_TM12M80Z

2

freud®

...	Confirm 0.000/07	Date 23/07/2007
SCALE 1:1	FREUDTOOLS	